high performance silt traps

SILT SENTINEL

range
specification brochure

june 2018

high performance silt traps

SILT SENTINEL

why do we need a silt trap

Over the last 15 years there has been a huge increase in the installation of modular/crate type attenuation and storage systems and even though the design of these systems has somewhat developed, there is still **'no'** real solution or significant design addition in the manufacture of these systems that prevents the ingress of silt into the structure from the drainage upstream and furthermore support the removal of the silt . . once it is inside the structure.

'The only proven way to remove silt before it enters the storage system, is to install a Silt Trap upstream'

Failure to install some form of silt trap before a crate attenuation system will over time have a significant affect on the sustainability, which could be dramatically reduced, particularly in smaller volume attenuation. This could mean the system would need to be replaced in the first few years . . if the silt is allowed to ingress into the system without a suitably designed silt trap upstream. This is further exasperated if the site is near to the coast or is heavily landscaped . . this can bring the life expectancy down even further.

UP TO 99% OF SILT TRAPPED

Our **Silt Sentinel** range features several very effective Silt Traps that have been designed primarily to be installed upstream of modular/crate attenuation systems and when managed correctly, have proven to prevent up to to **99%** of silt passing into the system, forming part of a SuDS Management and Sewer Infrastructure, helping prevent flooding by limiting the amount of silt that enters the attenuation system.

Manufactured using high strength plastic twinwall, all units are extremely robust, lightweight and easy to install. The complete range can be installed in granular surround or reclaimed material(where appropriate) and with the option of several pipe sizes and profiles.

The Silt Sentinel has become the first choice for many consultants, specifiers, installers and construction companies.

300 series

Applications: Designed specifically for siting upstream of smaller modular/crate type attenuation systems.

How it works : Rainwater enters the unit and any silt and solids in the flow will drop into the basket and initially settle inside, once full the excess rainwater will overflow into the main chamber and any lighter silt and sand will settle at the base of the trap and then cleaner separated water discharges from the outlet pipe into the attenuation system, supporting a more sustainable installation. **If fitted the filter basket can be simply removed for cleaning.**

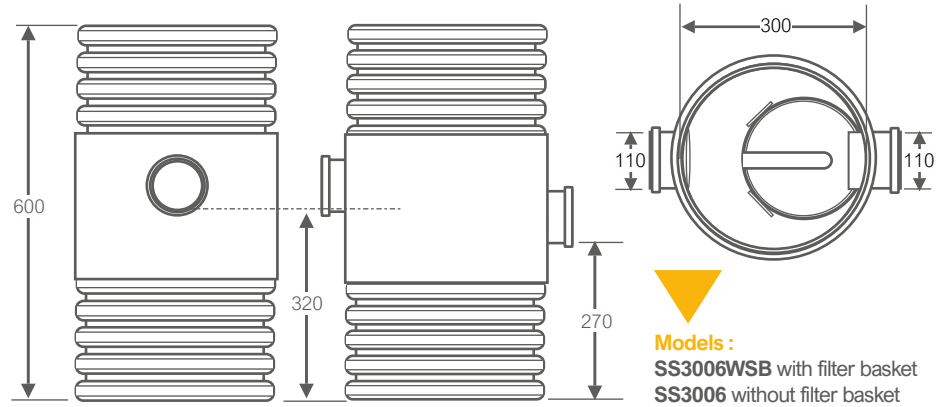

Models :
SS3006WSB with filter basket
SS3006 without filter basket

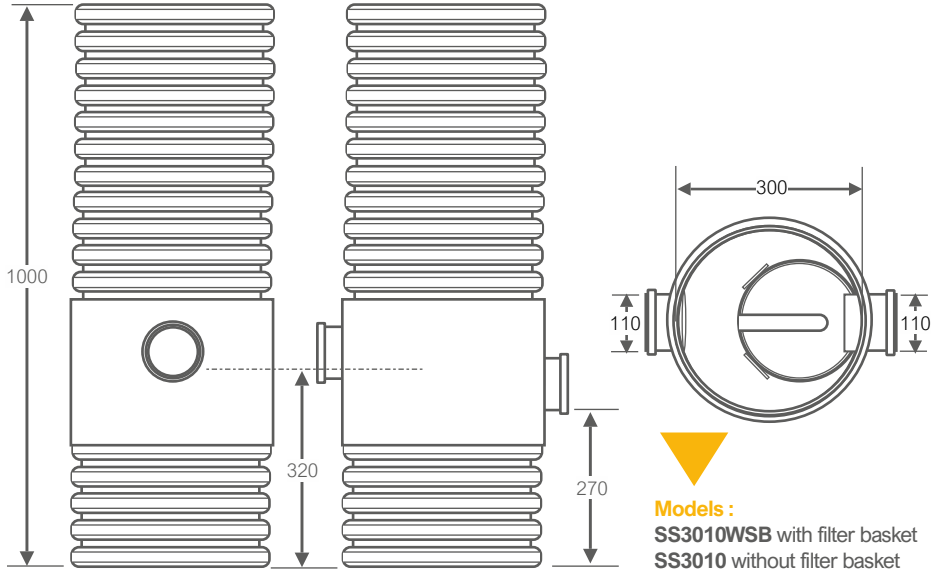

Models :
SS3010WSB with filter basket
SS3010 without filter basket

Options: The 300 series has the option of a removable integral filter basket which sits just below the inlet pipe. The basket capacity is around 22 kilos, so is able to be lifted out by one person.

500 series

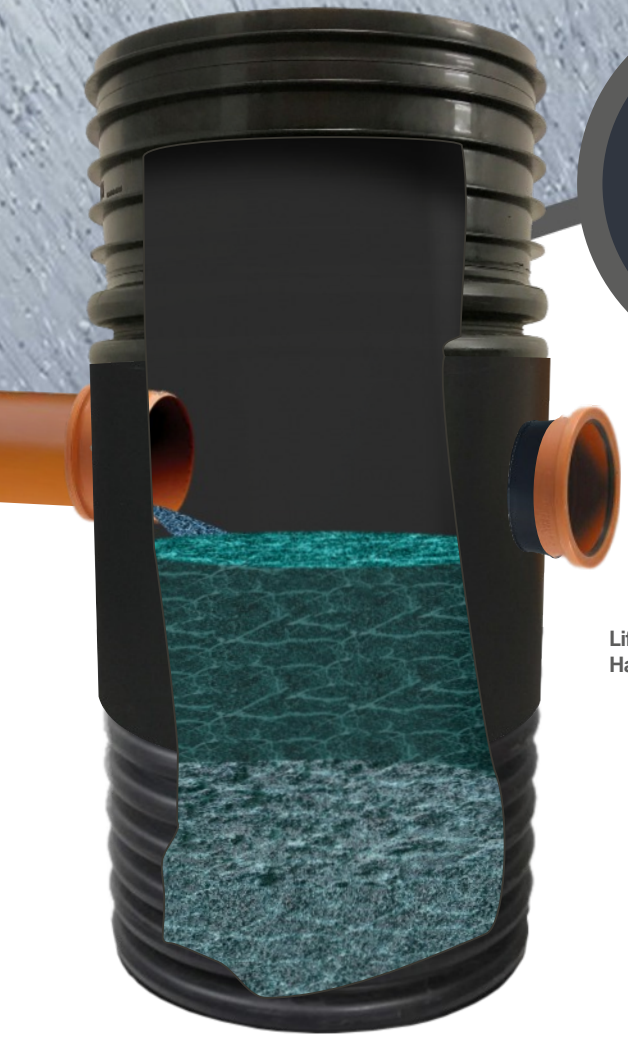

Applications: Designed specifically for siting upstream of small to medium size modular/crate type attenuation systems.

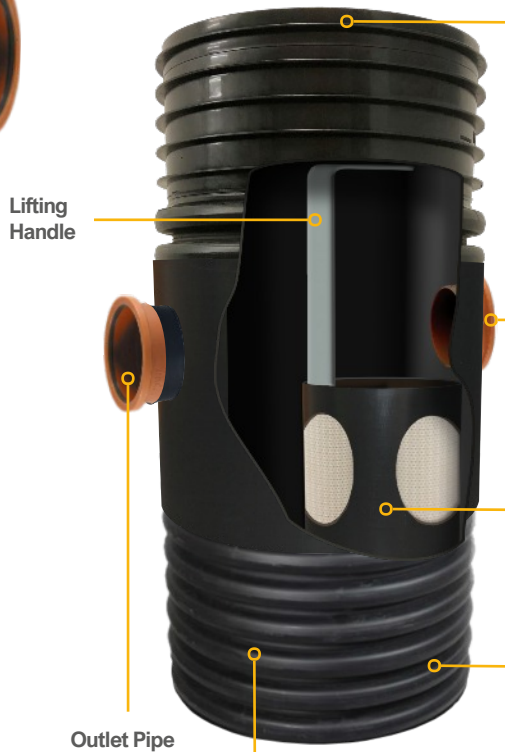

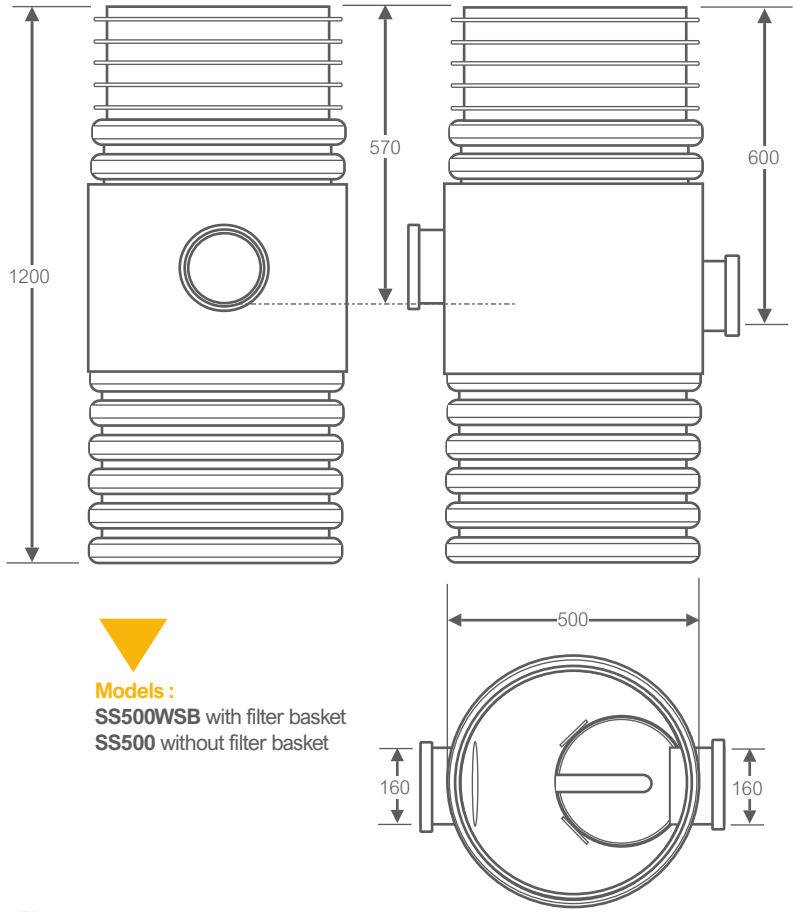

Models :
SS500WSB with filter basket
SS500 without filter basket

How it works : Rainwater enters the unit and any silt and solids in the flow will drop into the basket and initially settle inside, once full the excess rainwater will overflow into the main chamber and any lighter silt and sand will settle at the base of the trap and then cleaner separated water discharges from the outlet pipe into the attenuation system, supporting a more sustainable installation. **If fitted the filter basket can be simply removed for cleaning.**

Options: The 500 series has the option of a removable integral filter basket which sits just below the inlet pipe. The basket capacity is around 24 kilos, so is able to be lifted out by one person. The 500 unit can also be supplied with a lockable 200kn access cover if required and further risers can be installed to increase invert.

filter trap

Removes up to 99% of silt

500 series

Applications: All attenuation schemes. The filter trap is a very efficient silt and sand trap and will remove up to 99% of the silt and sand that would potentially enter the downstream drainage systems from surface areas. Highly recommended in areas where there is the potential of high levels of silt and sand, eg. coastal and heavily landscaped hard standing areas.

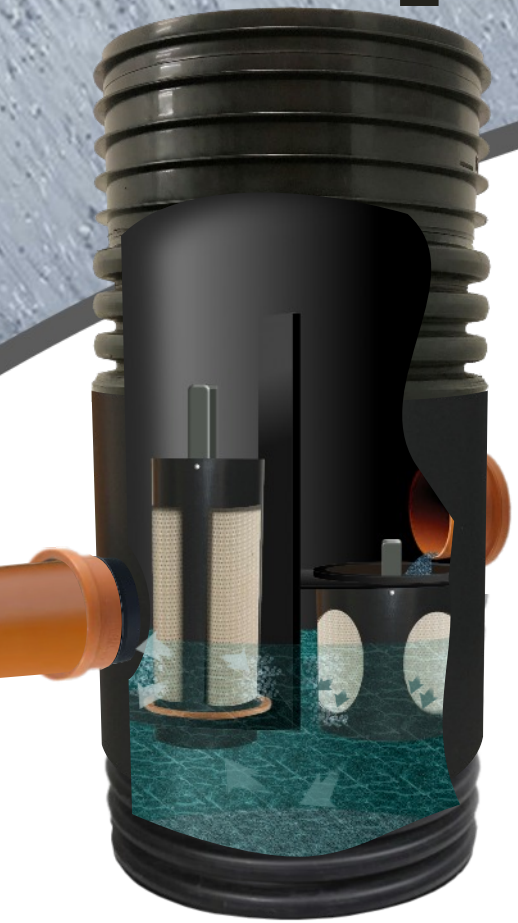

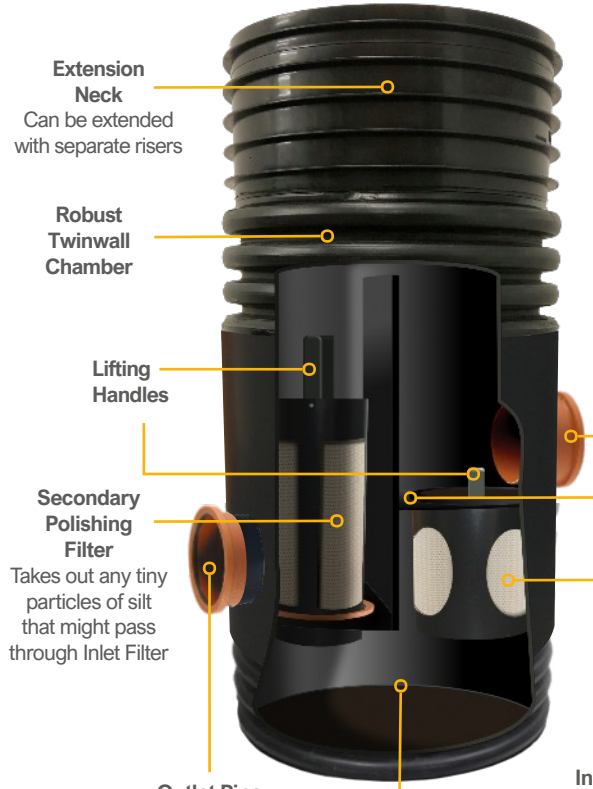

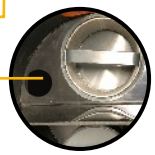

Overflow
Allows flow to continue when Inlet Filter Basket is blocked or full

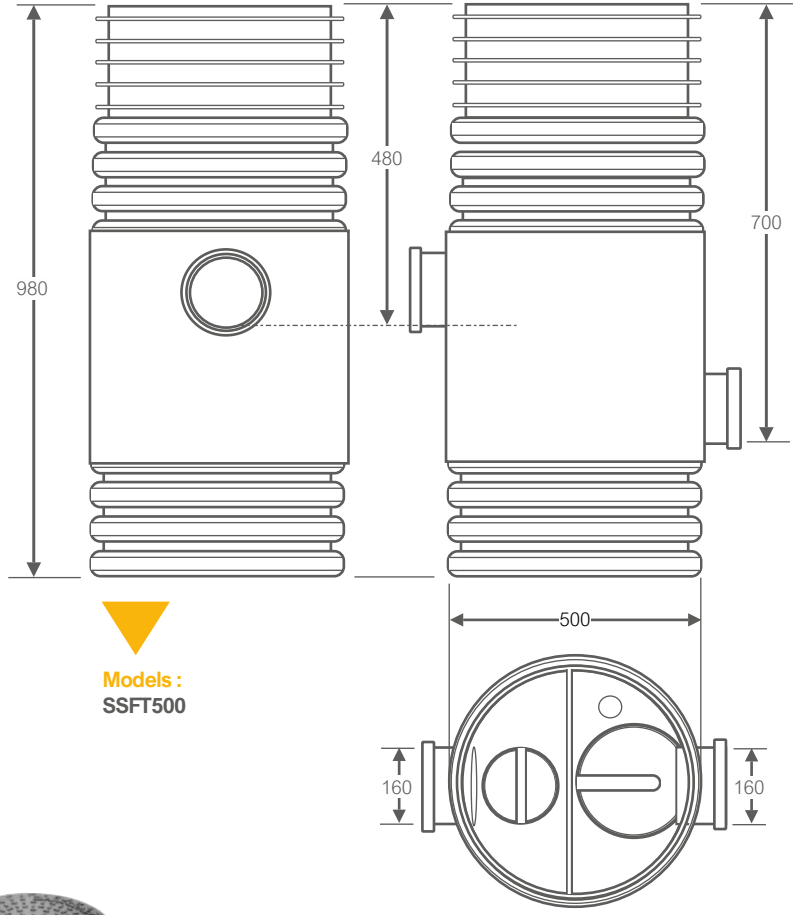

Models :
SSFT500

How it works : Surface water enters the unit and any silt and solids in the flow will drop into the inlet filter basket. This offers primary filtration, removing much of the heavier silt and sand. Any finer particles from the primary filter will pass through the filter basket and settle at the base. From there the filtered water has to then pass through a secondary fine mesh polishing filter, before it is discharged via the outlet pipe. **Both the filter basket and secondary filter can be simply removed for cleaning.**

Options: Can also be supplied with a lockable 200kn access cover if required and further risers can be installed to increase invert.

turtle ENVIRO
waterdifference

tel. 0191 3545900 & 0191 4102775
email: sales@turtleenviro.co.uk
www.turtleenviro.co.uk

high performance silt traps

SiLT SENTINEL